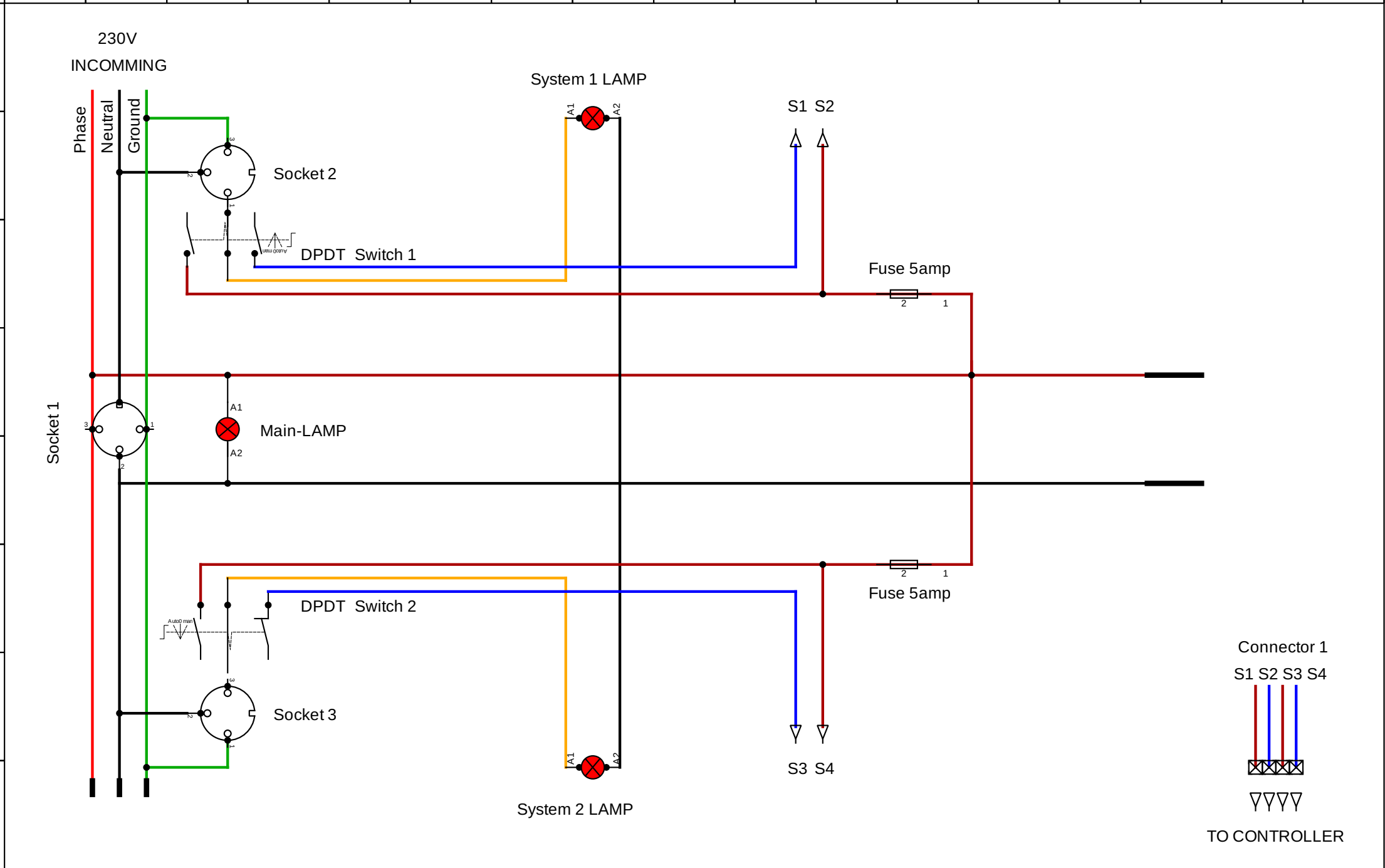

Author: Anubhav Singh	DOMINUS-BASE Power Diagram	File: 1
Date: 10-02-2026		Folio: 1/12

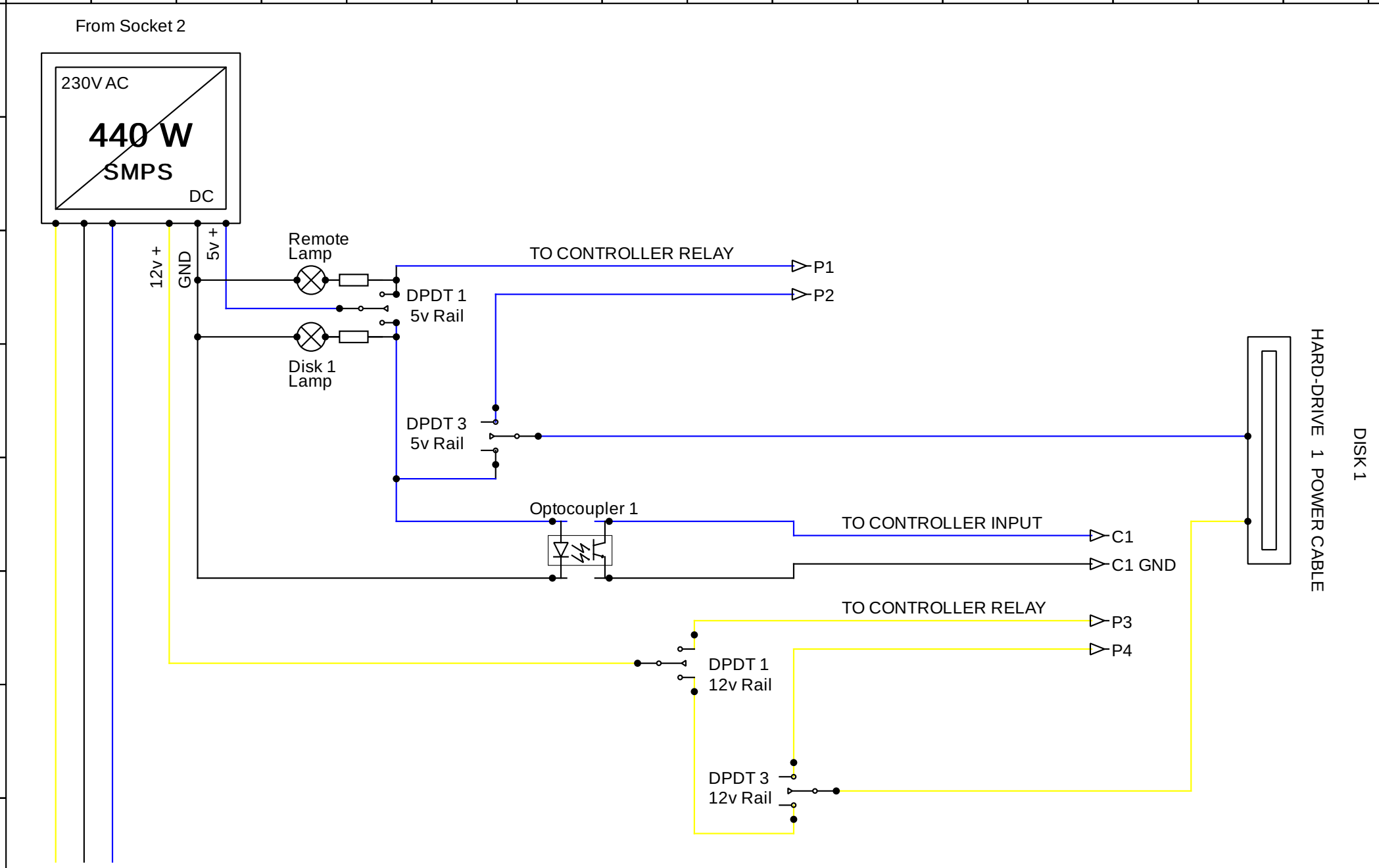

Author: Anuabhav Singh	SYSTEM 1 Disk 1 wiring	File:
Date: 10-02-2026		Folio: 2/12

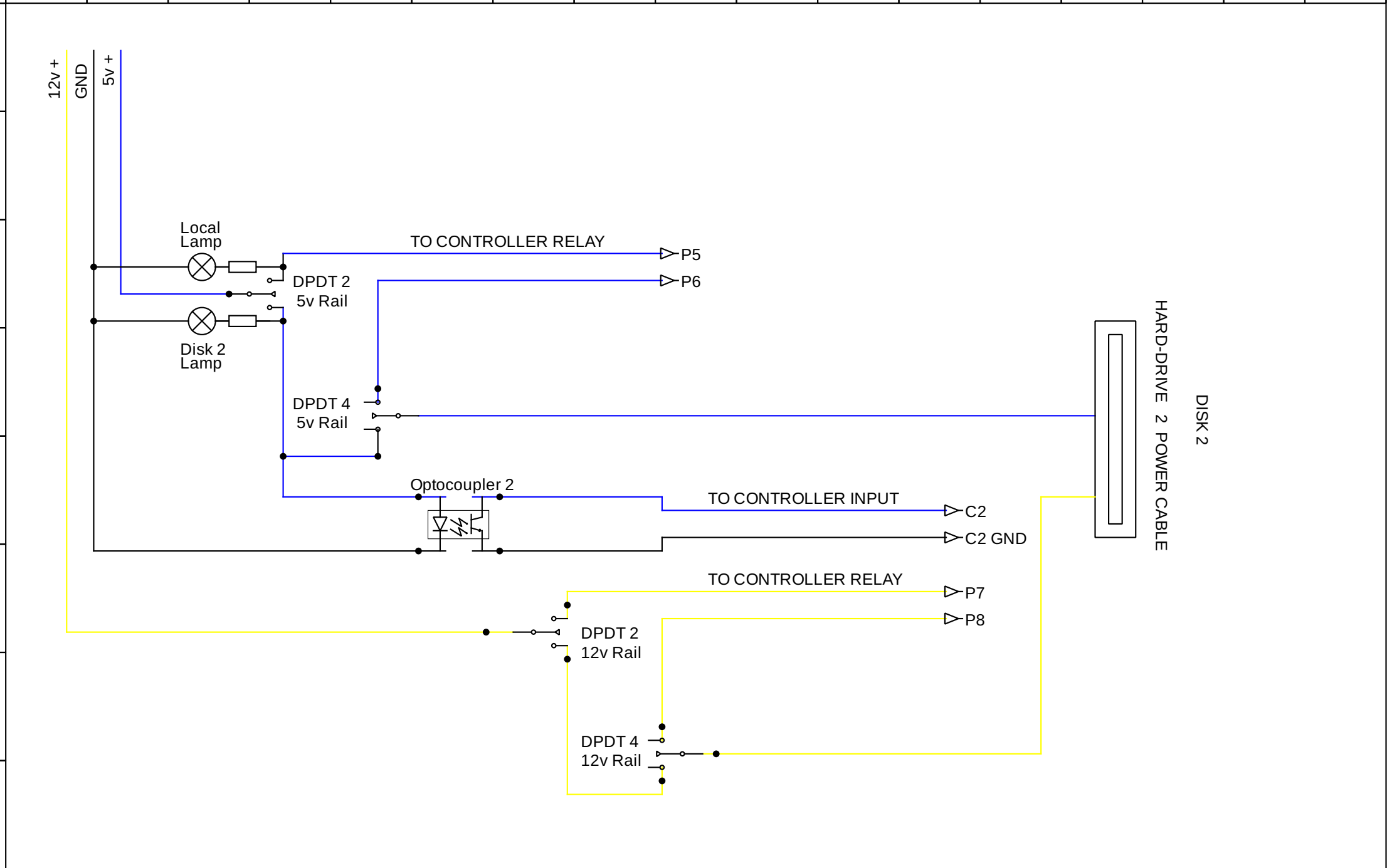

Author: Anubhav Singh	SYSTEM 1 Disk 2 wiring	File:
Date: 10-02-2026		Folio: 3/12

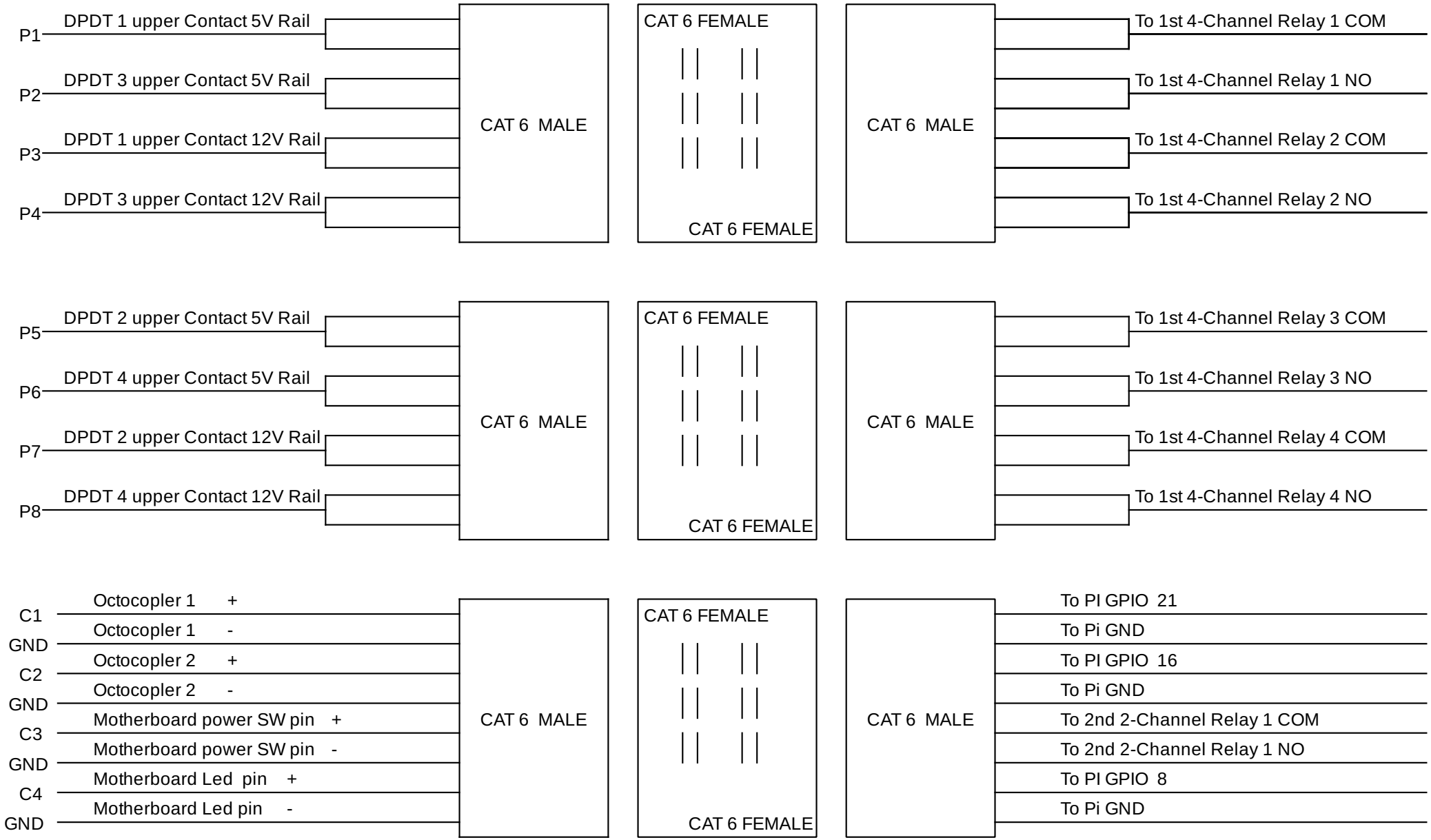

Author:	SYSTEM 1 CABLE TO CONTROLLER	File:
Date: 10-02-2026		Folio: 4/12

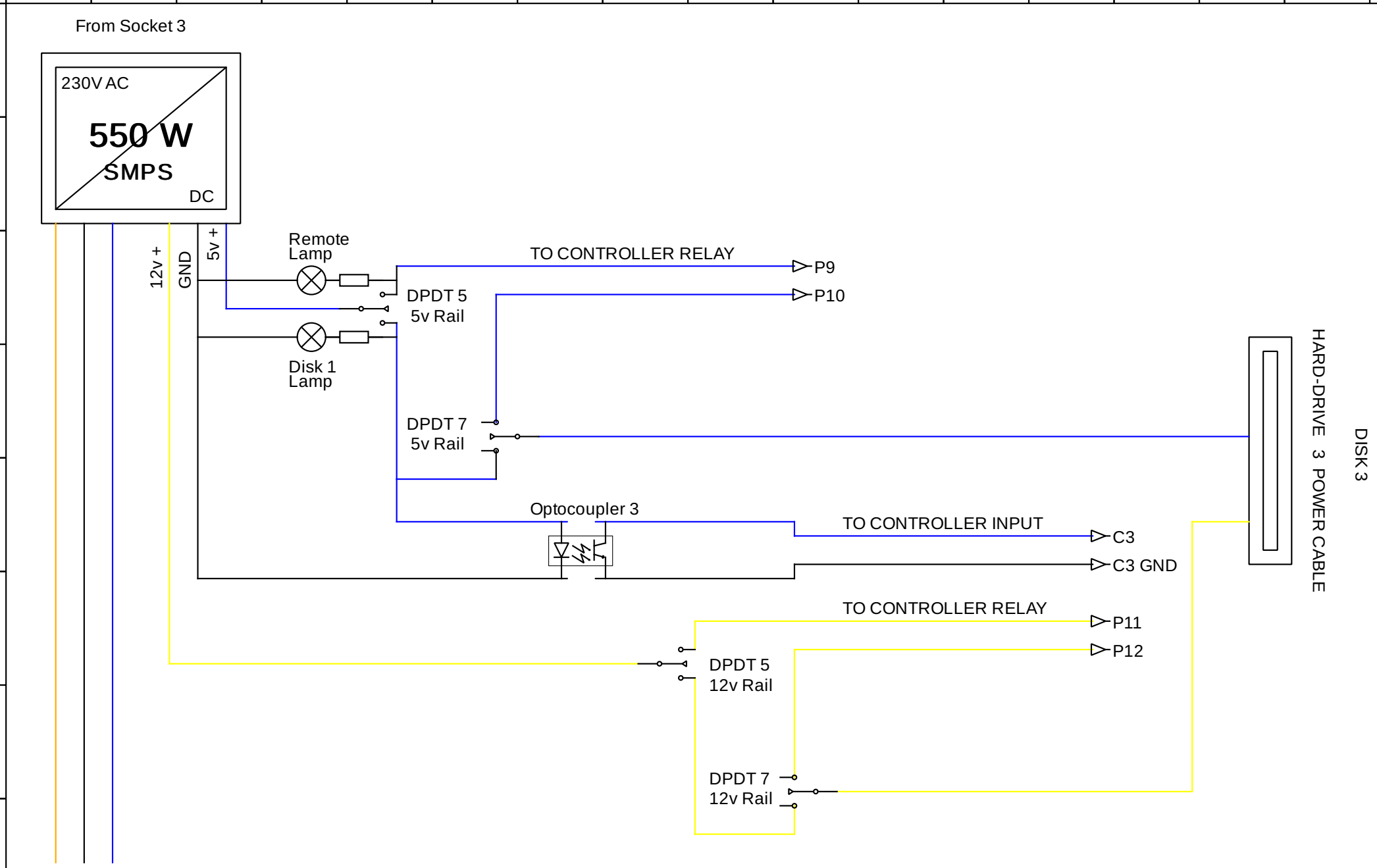

Author: Anubhav Singh	SYSTEM 2 Disk 1 wiring	File:
Date: 10-02-2026		Folio: 5/12

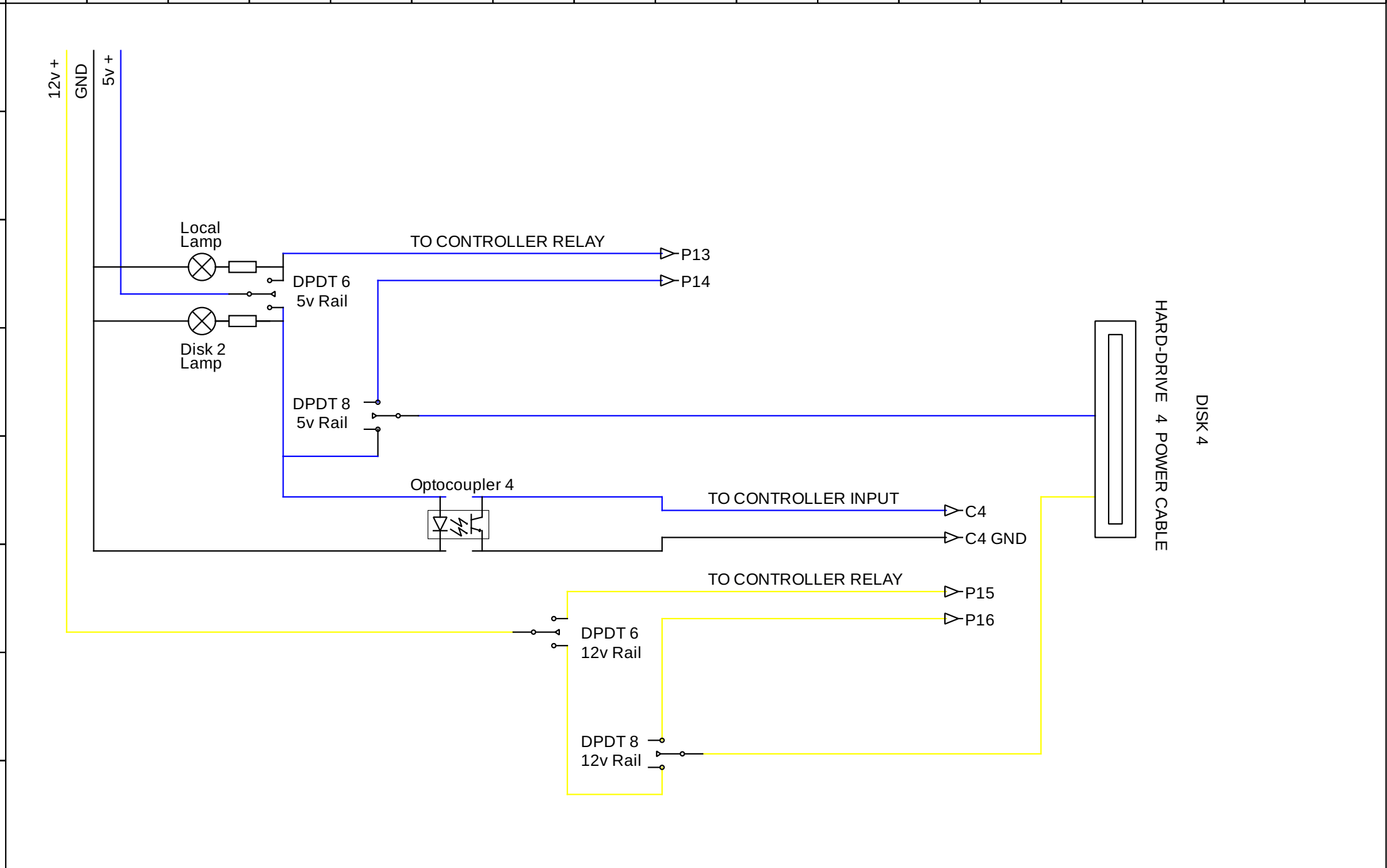

Author: Anubhav Singh	SYSTEM 2 Disk 2 wiring	File:
Date: 10-02-2026		Folio: 6/12

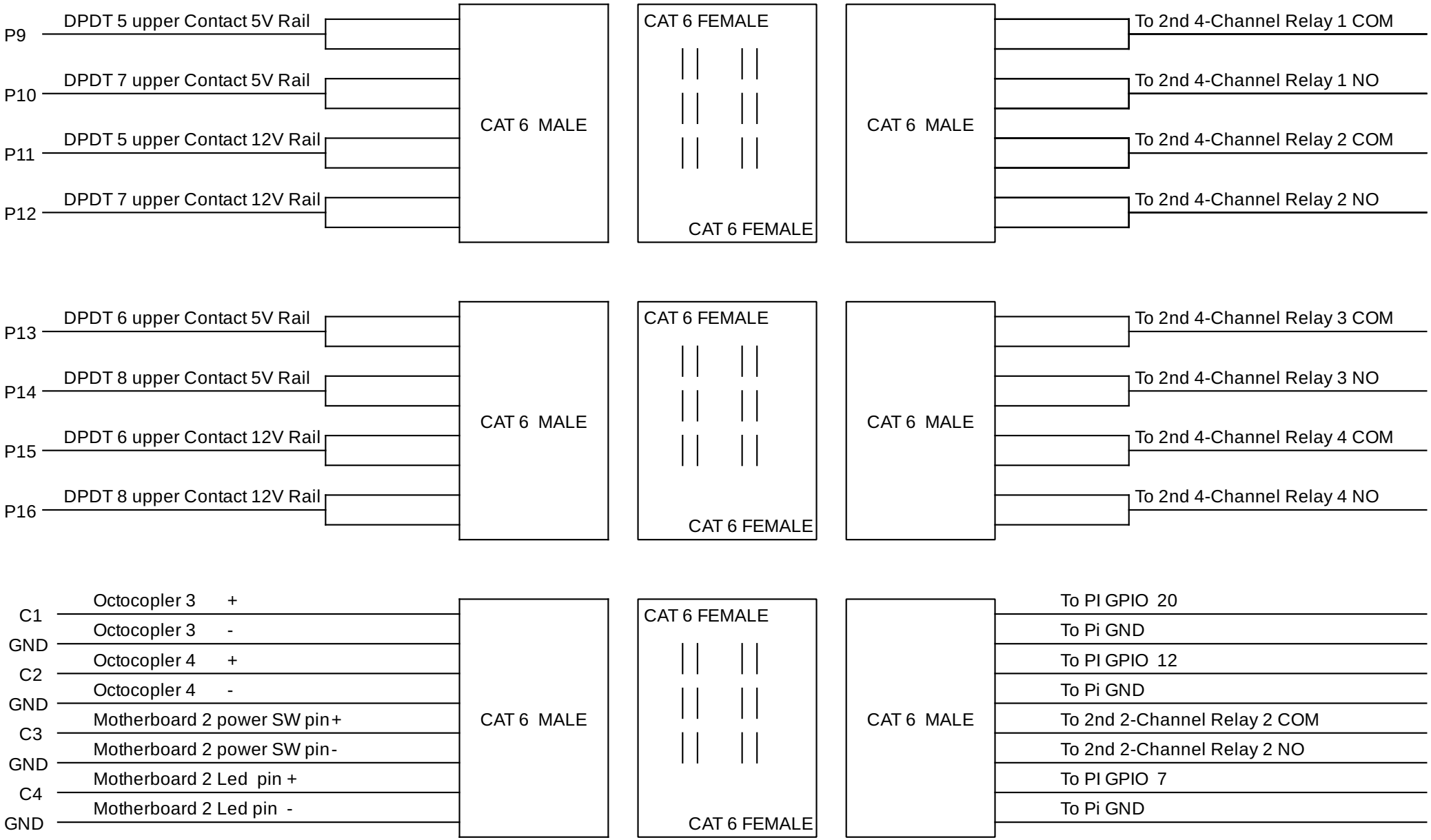

Author: Anubhav Singh	SYSTEM 2 CABLE TO CONTROLLER	File:
Date: 12-02-2026		Folio: 7/12

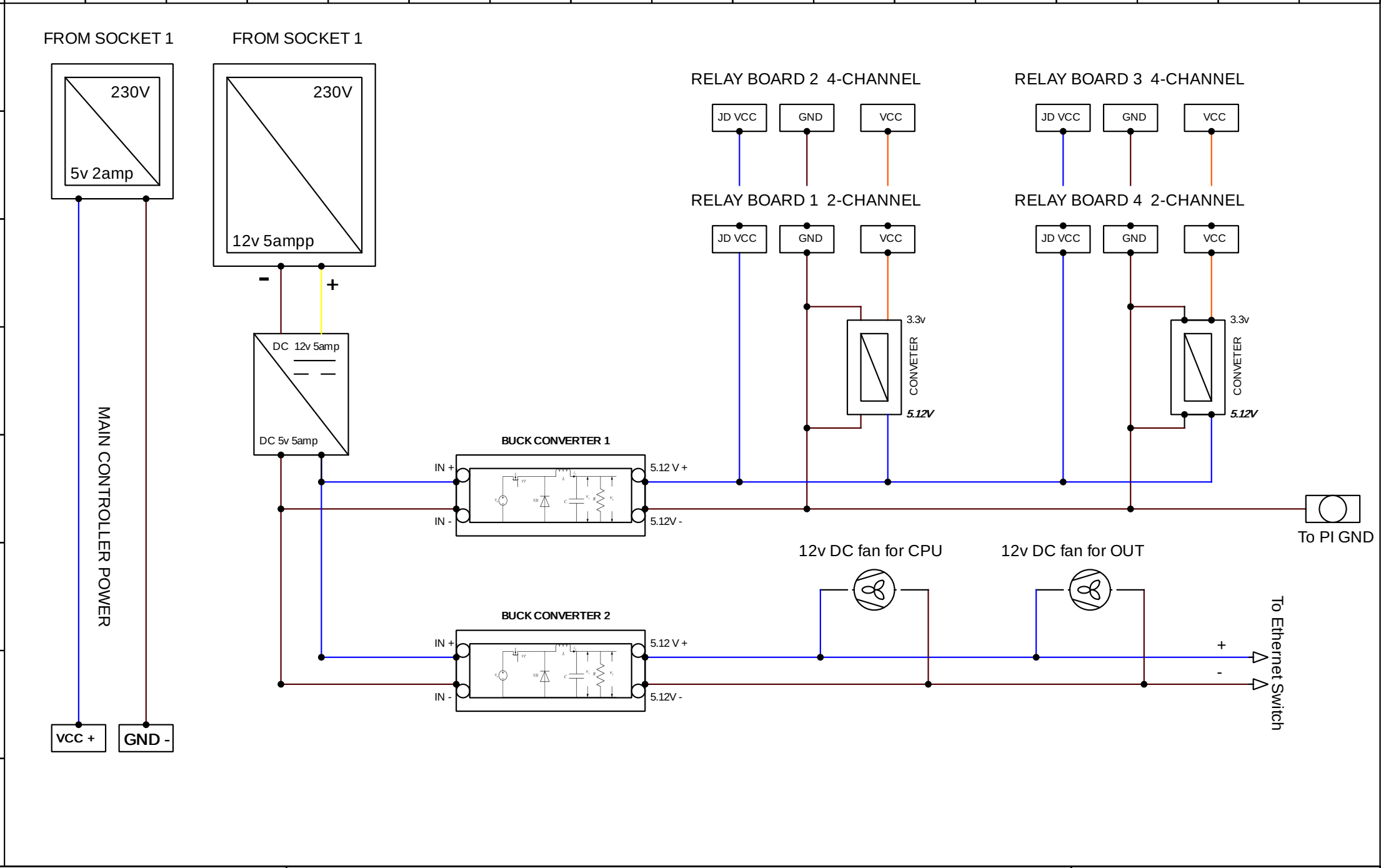

Author: Anubhav Singh	CONTROLLER POWER WIRING	File:
Date: 12-02-2026		Folio: 8/12

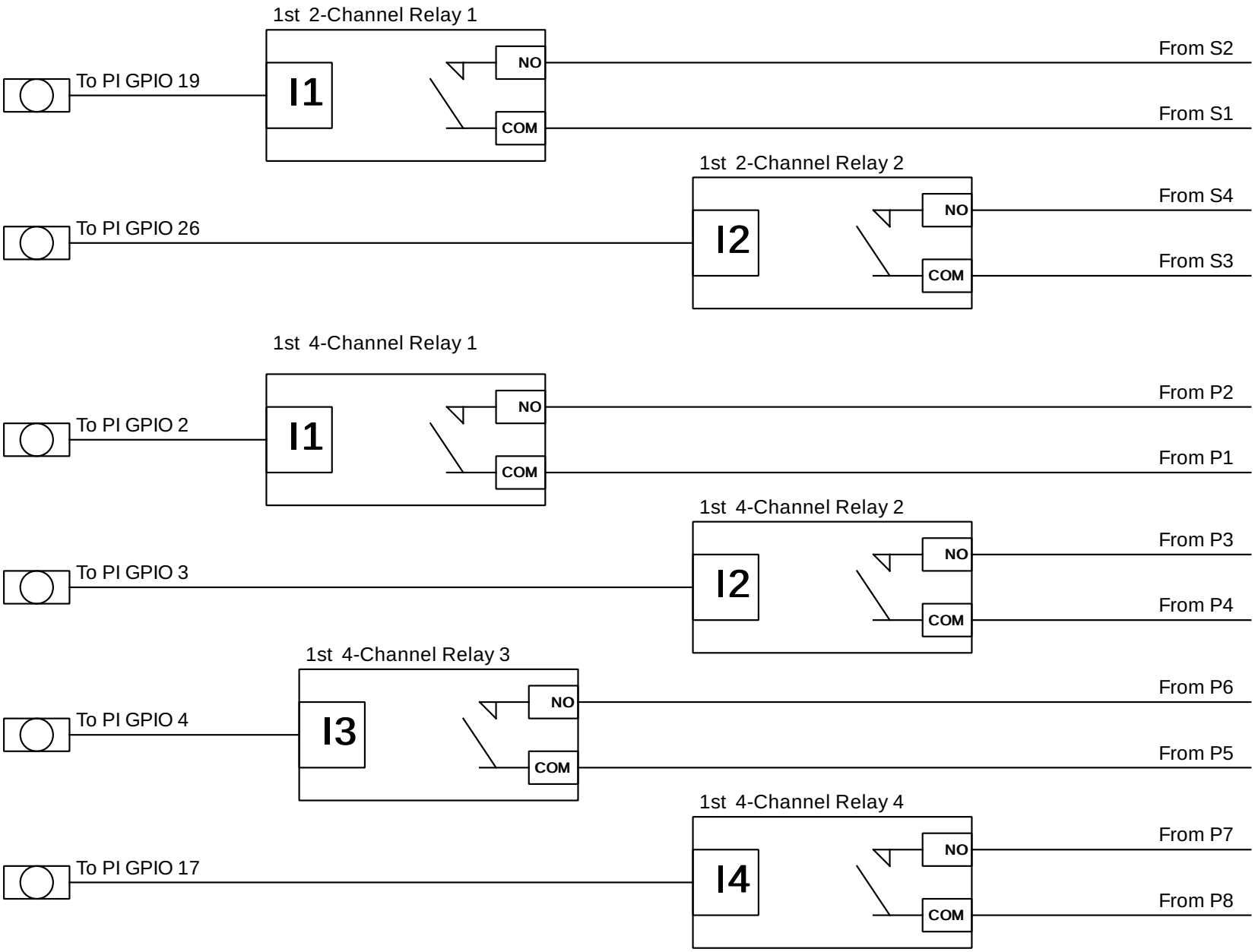

NOTE :- Relay that are use here is isolated with optocopler

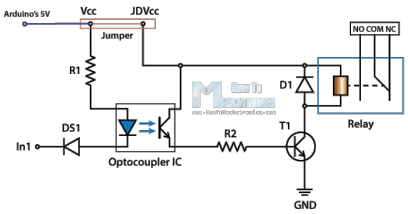

Author: Anubhav Singh	CONTROLLER CONTROL WIRING	File:
Date: 12-02-2026		Folio: 9/12

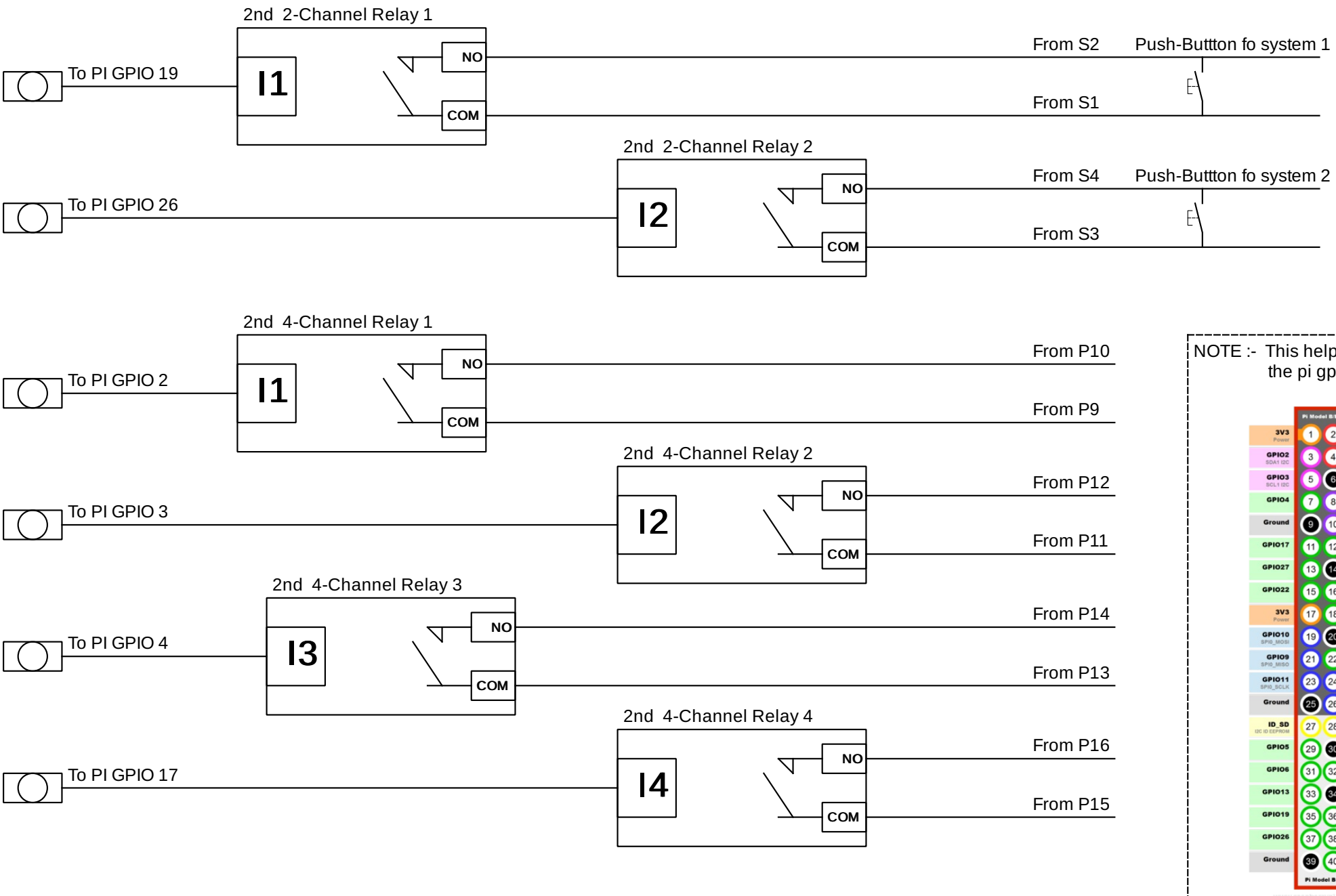

NOTE :- This help to understand the pi gpio placement

Author: Anubhav Singh	CONTROLLER CONTROL WIRING	File:
Date: 12-02-2026		Folio: 10/12

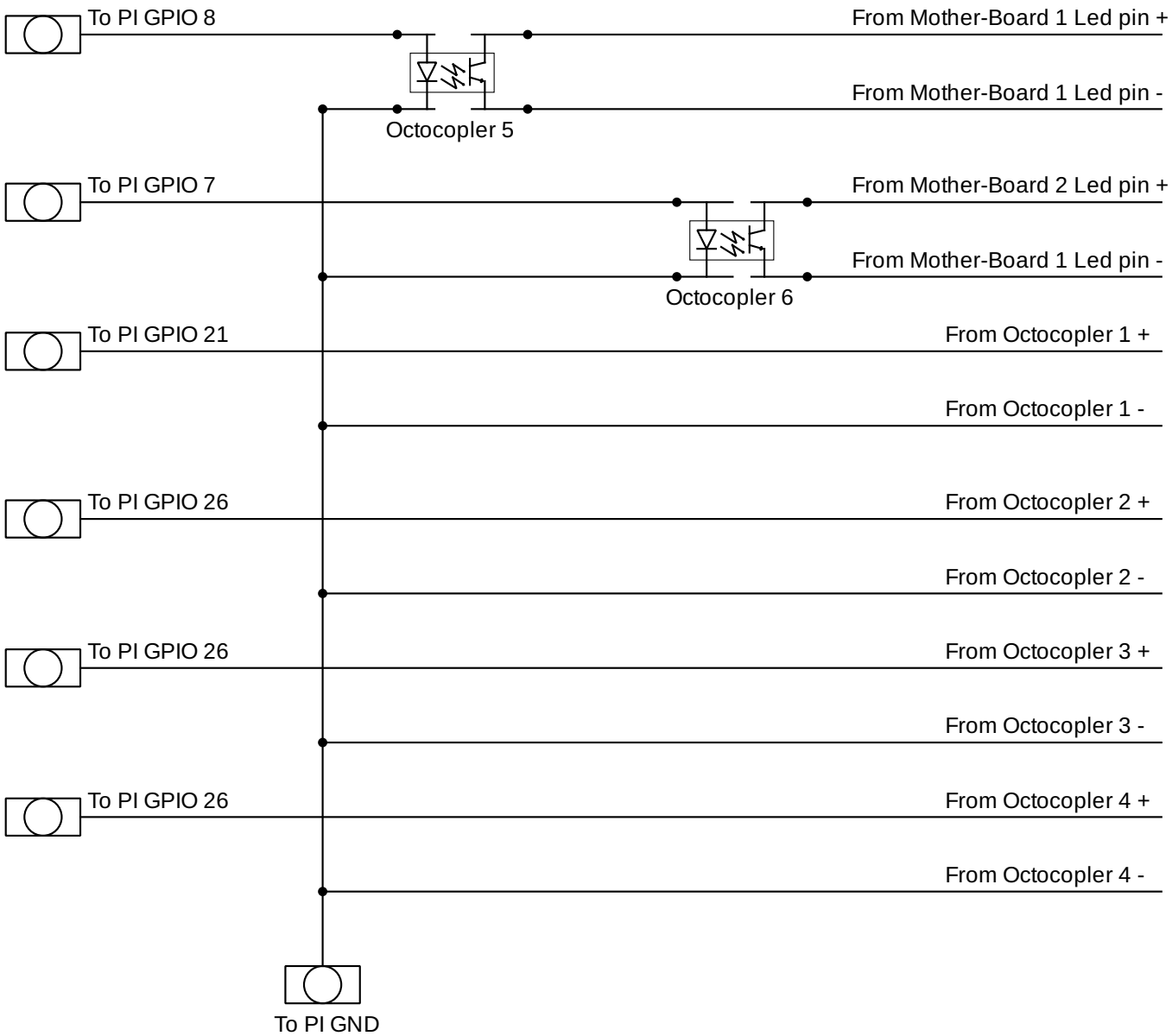

NOTE :- GPIO lines are optically isolated using octocouplers to protect the pi from voltage transients, inductive kickback,and ground potential differences, thereby improving reliability and extending controller lifespan

Author: Anubhav Singh	CONTROLLER CONTROL WIRING	File:
Date: 12-02-2026		Folio: 11/12

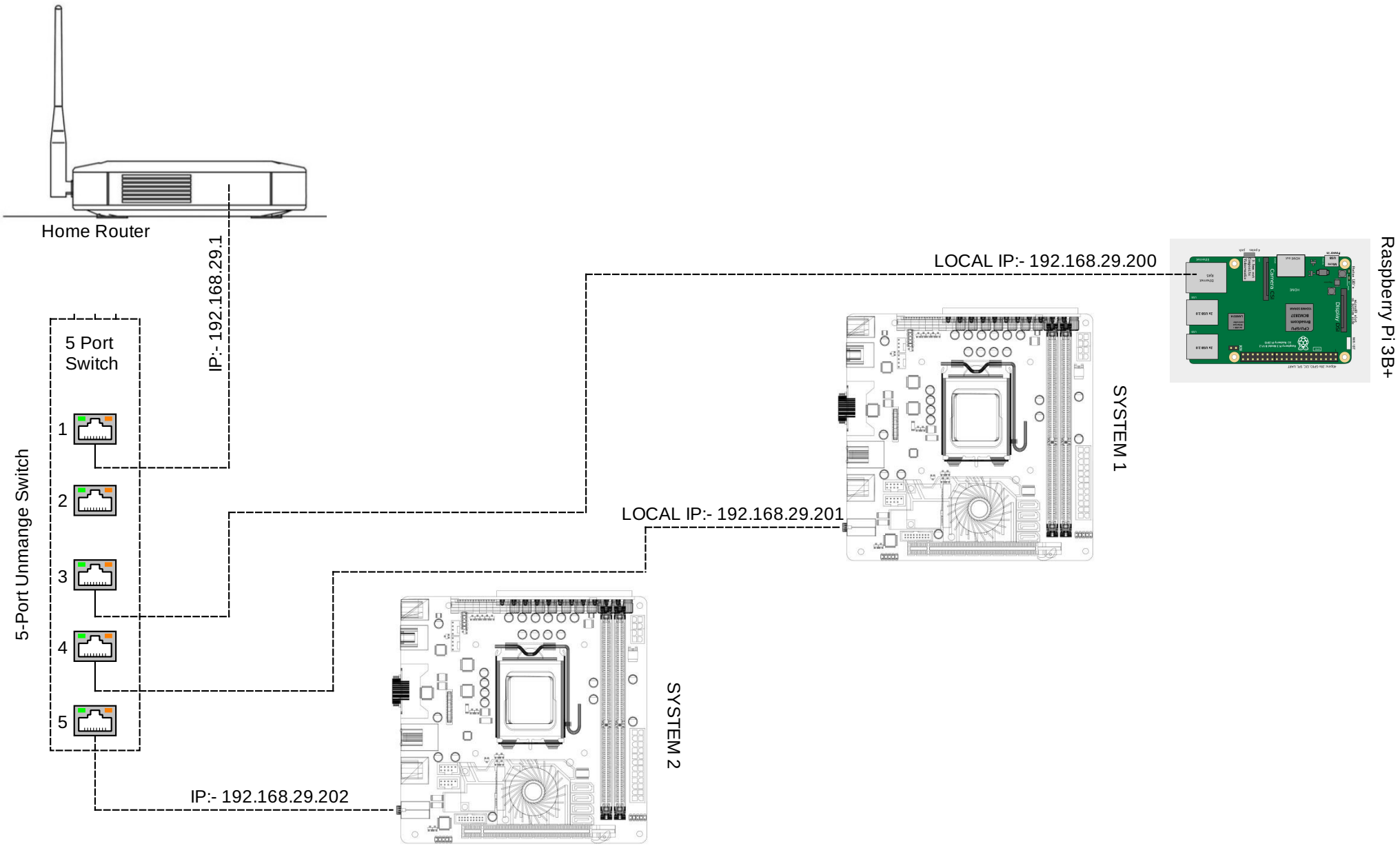

Author: Anubhav Singh	COMMINICATION ARCITECTURE	File:
Date: 12-02-2026		Folio: 12/12